PC3SH11YFZ Series

*Zero cross type is also available.
(**PC3SH21YFZ Series**)

V_{DRM} : 600V, Reinforced insulation type
Non-zero cross type
DIP 4 pin
Phototriac Coupler for triggering

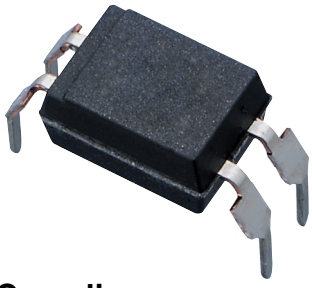

■ Description

PC3SH11YFZ Series reinforced insulation type Phototriac Coupler include an infrared emitting diode (IRED) optically coupled to an output Phototriac.

These devices feature full wave control and are ideal isolated drivers for medium to high current Triacs.

DIP package provides 5.0kV isolation from input to output with superior commutative noise immunity.

■ Features

1. High repetitive peak off-state voltage (V_{DRM} : 600V)
2. Non-zero crossing functionality
3. I_{FT} ranks available (see Model Line-up section in this datasheet)
4. 4 pin DIP package
5. Reinforced insulation type (MIN. 0.4mm internal separation)
6. Superior noise immunity (dV/dt : MIN. 1 000V/μs)
7. Lead-free components are also available (see Model Line-up section in this datasheet)
8. Double transfer mold construction (Ideal for Flow Soldering)
9. High isolation voltage between input and output (V_{iso}(rms) : 5.0kV)

■ Agency approvals/Compliance

1. Recognized by UL1577 (Double protection isolation), file No. E64380 (as model No. **3SH11**)
2. Approved by CSA, file No. CA95323 (as model No. **3SH11**)
3. Approved by BSI : BS-EN60065, file No. 6690/BS-EN60950, file No. 7421, (as model No. **3SH11**)
4. Approved by SEMKO, EN60065/EN60950, file No. 0226022 (as model No. **3SH11**)
5. Approved by DEMKO, EN60065/EN60950, file No. 311791 (as model No. **3SH11**)
6. Approved by FIMKO, EN60065/EN60950, file No. 18937 (as model No. **3SH11**)
7. Approved by VDE(*)(DIN EN 60747-5-2), file No. 40008087 (as model No. **3SH11**)
8. Package resin : UL flammability grade (94V-0)

(*) DIN EN60747-5-2 : successor standard of DIN VDE0884.
Up to Date code "RD" (December 2003), approval of DIN VDE0884.
From Date code "S1" (January 2004), approval of DIN EN60747-5-2.

■ Applications

1. Triggering for Triacs used to switch on and off devices which require AC Loads.
   For example heaters, fans, motors, solenoids, and valves.
2. Triggering for Triacs used for implementing phase control in applications such as lighting control and temperature control (HVAC).
3. AC line control in power supply applications.

Notice The content of data sheet is subject to change without prior notice.
In the absence of confirmation by device specification sheets, SHARP takes no responsibility for any defects that may occur in equipment using any SHARP devices shown in catalogs, data books, etc. Contact SHARP in order to obtain the latest device specification sheets before using any SHARP device.

Sheet No.: D2-A07201EN
Date Mar. 31. 2004
© SHARP Corporation

■ Internal Connection Diagram

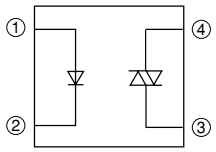

① Anode
② Cathode
③ Anode/Cathode
④ Cathode/Anode

■ Outline Dimensions

(Unit : mm)

1. Through-Hole [ex. **PC3SH11YSZ**]

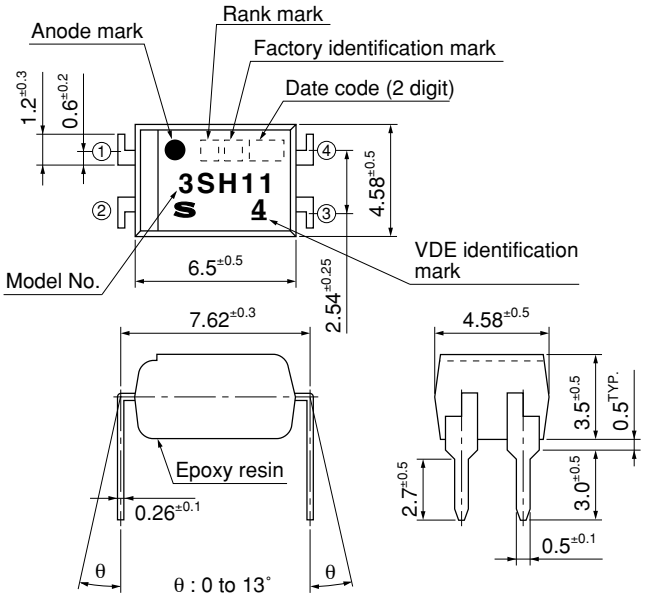

Product mass : approx. 0.23g

2. Wide Through-Hole Lead-Form [ex. **PC3SH11YFZ**]

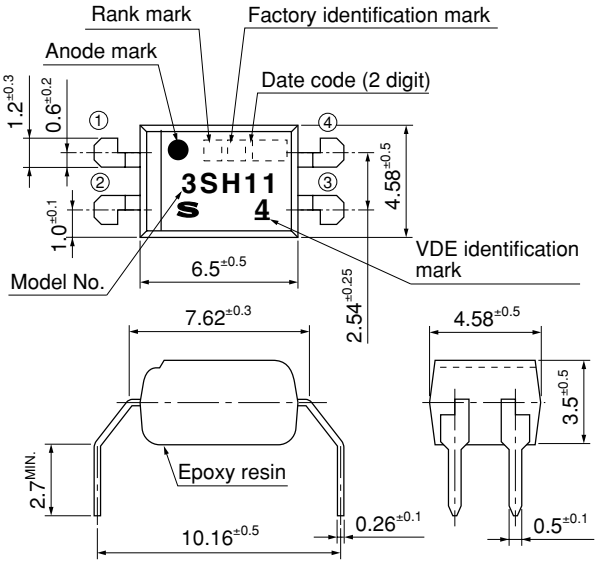

Product mass : approx. 0.23g

3. SMT Gullwing Lead-Form [ex. **PC3SH11YIP**]

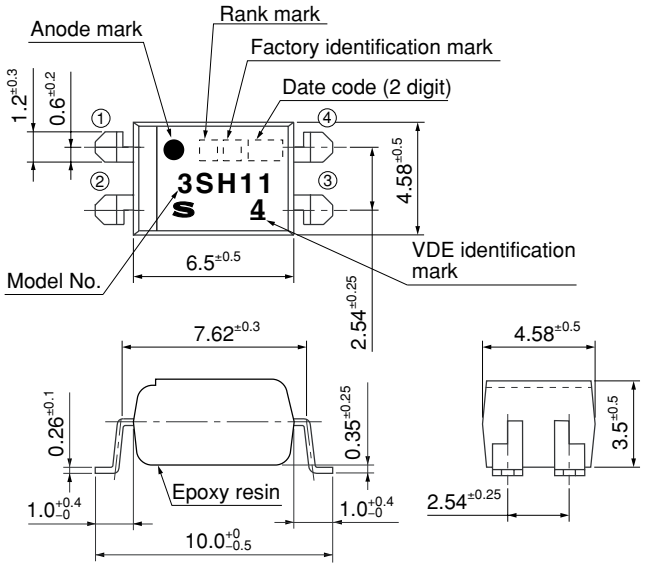

Product mass : approx. 0.21g

4. Wide SMT Gullwing Lead-Form [ex. **PC3SH11YUP**]

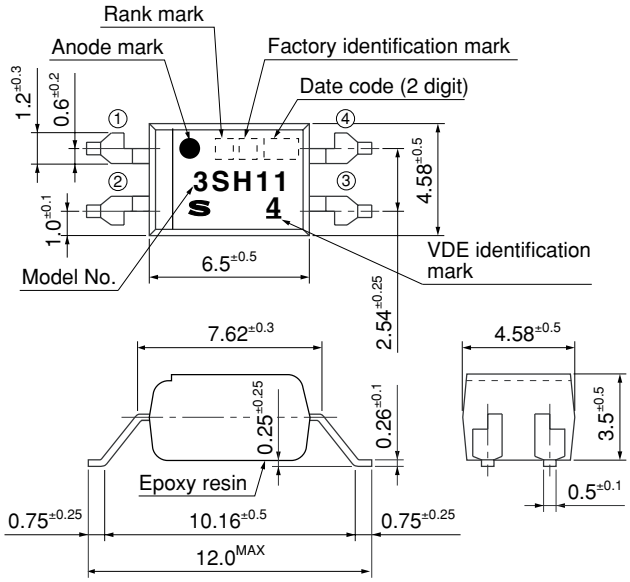

Product mass : approx. 0.22g

Date code (2 digit)

1st digit				2nd digit	
Year of production				Month of production	
A.D.	Mark	A.D	Mark	Month	Mark
1990	A	2002	P	January	1
1991	B	2003	R	February	2
1992	C	2004	S	March	3
1993	D	2005	T	April	4
1994	E	2006	U	May	5
1995	F	2007	V	June	6
1996	H	2008	W	July	7
1997	J	2009	X	August	8
1998	K	2010	A	September	9
1999	L	2011	B	October	O
2000	M	2012	C	November	N
2001	N	⋮	⋮	December	D

repeats in a 20 year cycle

Factory identification mark

Factory identification Mark	Country of origin
no mark	Japan
■	
◢	Indonesia
◸	Philippines
◥	China

* This factory marking is for identification purpose only.
Please contact the local SHARP sales representative to see the actural status of the production.

Rank mark

Refer to the Model Line-up table

■ Absolute Maximum Ratings

(T_a=25˚C)

Parameter		Symbol	Rating	Unit
Input	Forward current	I_F	50	mA
	Reverse voltage	V_R	6	V
Output	RMS ON-state current	I_T(rms)	0.1	A
	Peak one cycle surge current	I_{surge}	1.2 *3	A
	Repetitive peak OFF-state voltage	V_{DRM}	600	V
*1 Isolation voltage		V_{iso}(rms)	5.0	kV
Operating temperature		T_{opr}	−30 to +100	˚C
Storage temperature		T_{stg}	−55 to +125	˚C
*2 Soldering temperature		T_{sol}	270 *4	˚C

*1 40 to 60%RH, AC for 1minute, f=60Hz
*2 For 10s
*3 f=50Hz sine wave
*4 Lead solder plating models: 260˚C

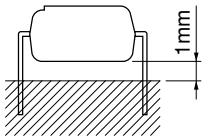

■ Electro-optical Characteristics

(T_a=25˚C)

Parameter			Symbol	Conditions	MIN.	TYP.	MAX.	Unit
Input	Forward voltage		V_F	I_F=20mA	–	1.2	1.4	V
	Reverse current		I_R	V_R=3V	–	–	10	μA
Output	Repentitive peak OFF-state current		I_{DRM}	V_D=V_{DRM}	–	–	1	μA
	ON-state voltage		V_T	I_T=0.1A	–	–	3.0	V
	Holding current		I_H	V_D=6V	0.1	–	3.5	mA
	Critical rate of rise of OFF-state voltage		dV/dt	V_D=1/√2 ·V_{DRM}	1 000	2 000	–	V/μs
Transfer charac-teristics	Minimum trigger current	Rank A	I_{FT}	V_D=6V, R_L=100Ω	–	–	10	mA
		Rank B			–	–	7	
	Isolation resistance		R_{ISO}	DC500V,40 to 60%RH	5×10^{10}	10^{11}	–	Ω
	Turn-on time		t_{on}	V_D=6V, R_L=100Ω, I_F=20mA	–	–	100	μs

■ Model Line-up (1) (Lead-free components)

Lead Form	Through-Hole		SMT Gullwing		Wide Through-Hole		Rank mark	I_{FT}[mA] (V_D=6V, R_L=100Ω)
Shipping Package	Sleeve							
	50pcs/sleeve							
DIN EN60747-5-2	——	Approved	——	Approved	——	Approved		
Model No.	——	PC3SH11YSZAF	——	PC3SH11YIZAF	——	PC3SH11YFZAF	A	MAX.10
	——	PC3SH11YSZBF	——	PC3SH11YIZBF	——	PC3SH11YFZBF	B	MAX.7

Lead Form	Wide SMT Gullwing		SMT Gullwing		Wide SMT Gullwing		Rank mark	I_{FT}[mA] (V_D=6V, R_L=100Ω)
Shipping Package	Sleeve		Taping					
	50pcs/sleeve		2 000pcs/reel					
DIN EN60747-5-2	——	Approved	——	Approved	——	Approved		
Model No.	——	PC3SH11YUZAF	——	PC3SH11YIPAF	——	PC3SH11YUPAF	A	MAX.10
	——	PC3SH11YUZBF	——	PC3SH11YIPBF	——	PC3SH11YUPBF	B	MAX.7

■ Model Line-up (2) (Lead solder plating components)

Lead Form	Through-Hole		SMT Gullwing		Wide Through-Hole		Rank mark	I_{FT}[mA] (V_D=6V, R_L=100Ω)
Shipping Package	Sleeve							
	50pcs/sleeve							
DIN EN60747-5-2	——	Approved	——	Approved	——	Approved		
Model No.	——	PC3SH11YSZA	——	PC3SH11YIZA	——	PC3SH11YFZA	A	MAX.10
	——	PC3SH11YSZB	——	PC3SH11YIZB	——	PC3SH11YFZB	B	MAX.7

Lead Form	Wide SMT Gullwing		SMT Gullwing		Wide SMT Gullwing		Rank mark	I_{FT}[mA] (V_D=6V, R_L=100Ω)
Shipping Package	Sleeve		Taping					
	50pcs/sleeve		2 000pcs/reel					
DIN EN60747-5-2	——	Approved	——	Approved	——	Approved		
Model No.	——	PC3SH11YUZA	——	PC3SH11YIPA	——	PC3SH11YUPA	A	MAX.10
	——	PC3SH11YUZB	——	PC3SH11YIPB	——	PC3SH11YUPB	B	MAX.7

Please contact a local SHARP sales representative to inquire about production status.

Fig.1 Forward Current vs. Ambient Temperature

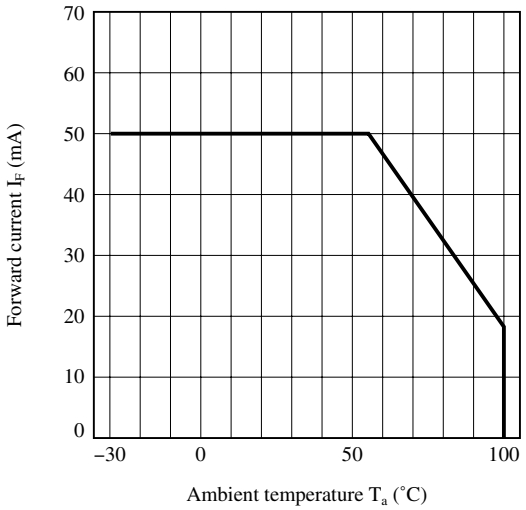

Fig.2 RMS ON-state Current vs. Ambient Temperature

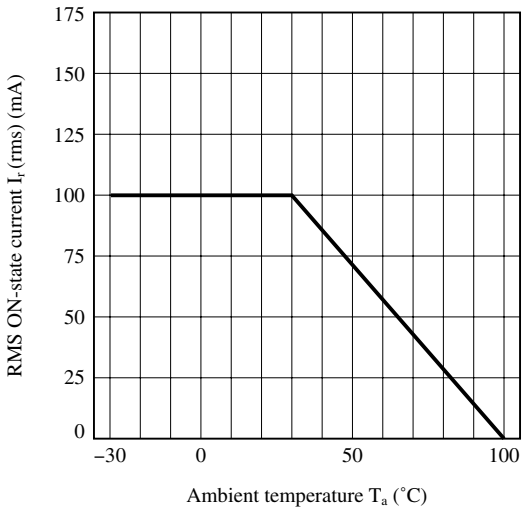

Fig.3 Forward Current vs. Forward Voltage

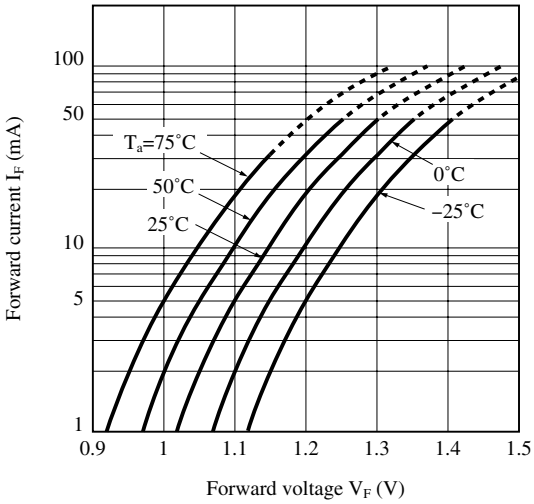

Fig.4 Minimum Trigger Current vs. Ambient Temperature

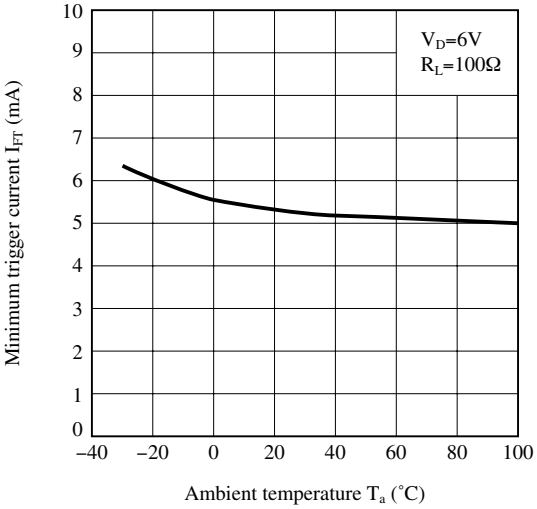

Fig.5 Relative Repetitive Peak OFF-state Voltage vs. Ambient Temperature

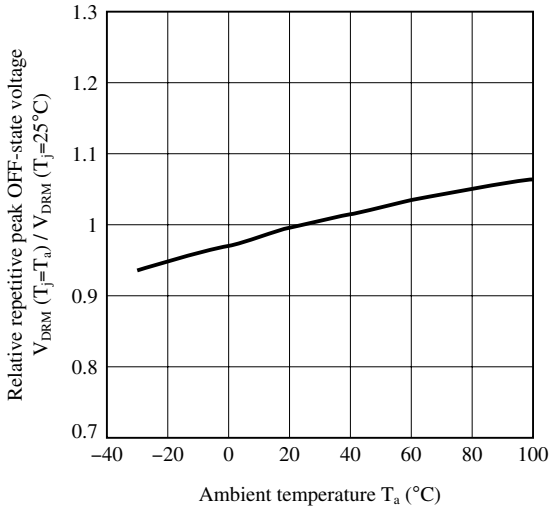

Fig.6 ON-state Voltage vs. Ambient Temperature

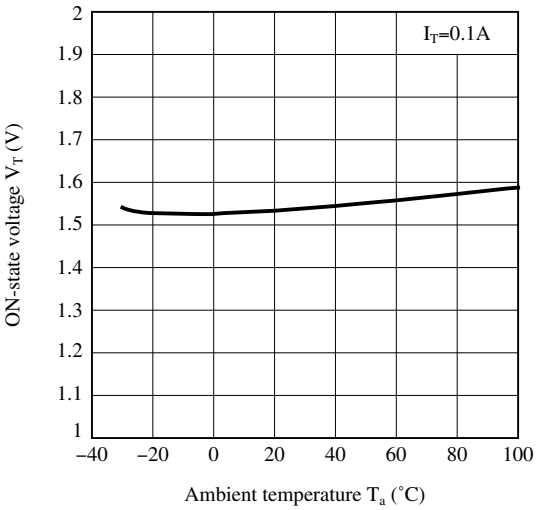

Fig.7 Holding Current vs. Ambient Temperature

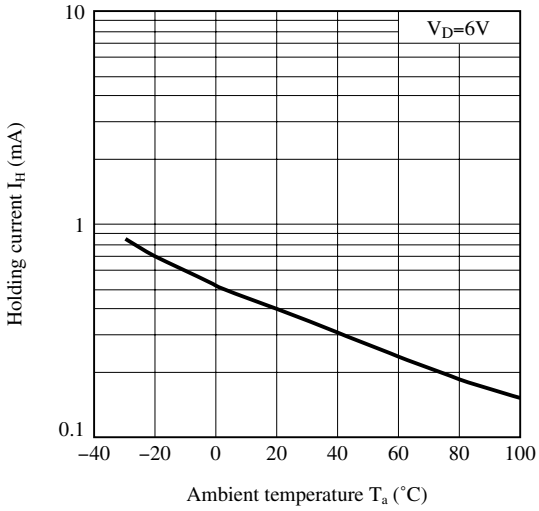

Fig.8 Repetitive Peak OFF-state Current vs. Ambient Temperature

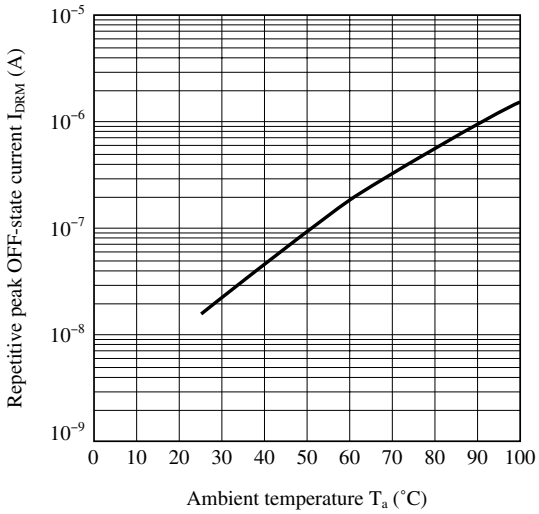

Remarks : Please be aware that all data in the graph are just for reference.

■ Design Considerations

● Design guide

In order for the Phototriac to turn off, the triggering current (I_F) must be 0.1mA or less.

Please refrain from using these devices in a direct drive configuration.
These Phototriac Coupler are intended to be used as triggering device for main Triacs.
Please ensure that the output rating of these devices will be sufficient for triggering the main output Triac of your choice. Failure to do may result in malfunctions.

In phase control applications or where the Phototriac Coupler is being by a pulse signal, please ensure that the pulse width is a minimum of 1ms.

For designs that will experience excessive noise or sudden changes in load voltage, please include an appropriate snubber circuit as shown in the below circuit.
Please keep in mind that Sharp Phototriac Couplers incorporate superor dV/dt ratings which can often eliminate the need for a snubber circuit.

● Degradation

In general, the emission of the IRED used in Phototriac Couplers will degrade over time.
In the case where long term operation and / or constant extreme temperature fluctuations will be applied to the devices, please allow for a worst case scenario of 50% degradation over 5years.
Therefore in order to maintain proper operation, a design implementing these Phototriac Couplers should provide at least twice the minimum required triggering current from initial operation.

● Recommended Foot Print (reference)

SMT Gullwing Lead-form

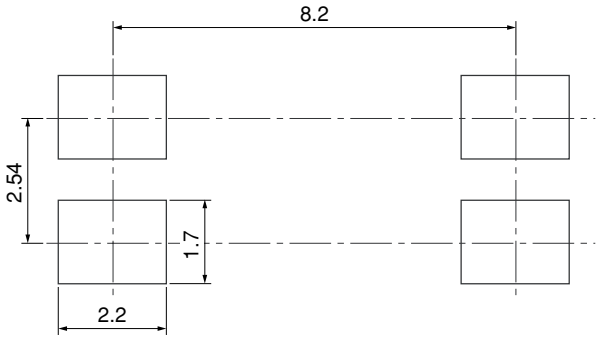

Wide SMT Gullwing Lead-form

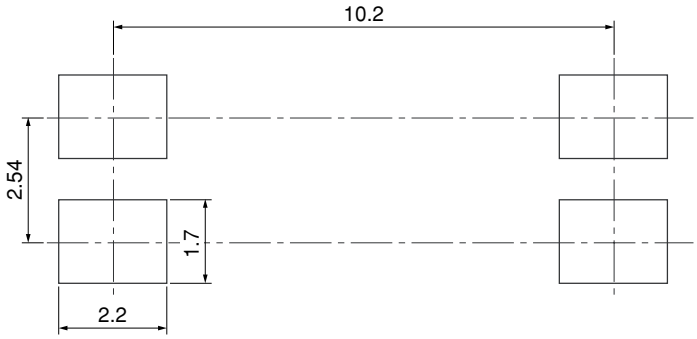

(Unit : mm)

● Standard Circuit (Medium/High Power Triac Drive Circuit)

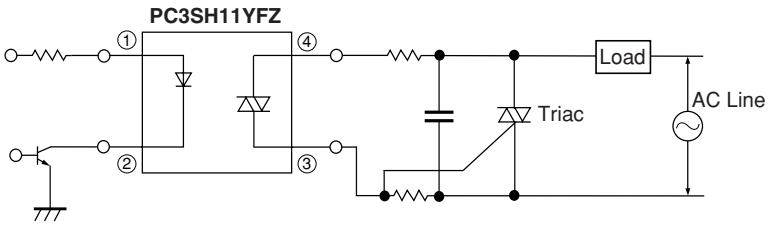

Note) Please add the snubber circuit according to a condition.
Any snubber or varistor used for the above mentioned scenarios should be located as close to the main output triac as possible.

☆ For additional design assistance, please review our corresponding Optoelectronic Application Notes.

■ Manufacturing Guidelines

● Soldering Method

Reflow Soldering:

Reflow soldering should follow the temperature profile shown below.
Soldering should not exceed the curve of temperature profile and time.
Please don't solder more than twice.

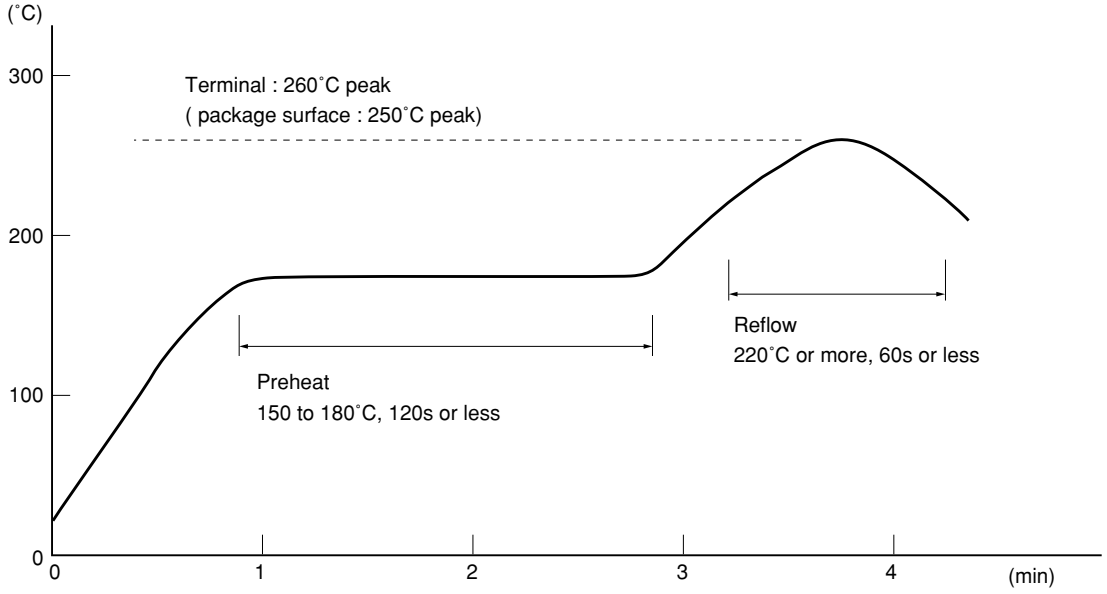

Flow Soldering :

Due to SHARP's double transfer mold construction submersion in flow solder bath is allowed under the below listed guidelines.

Flow soldering should be completed below 270˚C and within 10s.
Preheating is within the bounds of 100 to 150˚C and 30 to 80s.
Please don't solder more than twice.

Hand soldering

Hand soldering should be completed within 3s when the point of solder iron is below 400˚C.
Please don't solder more than twice.

Other notices

Please test the soldering method in actual condition and make sure the soldering works fine, since the impact on the junction between the device and PCB varies depending on the tooling and soldering conditions.

● Cleaning instructions

Solvent cleaning :

Solvent temperature should be 45˚C or below. Immersion time should be 3minutes or less.

Ultrasonic cleaning :

The impact on the device varies depending on the size of the cleaning bath, ultrasonic output, cleaning time, size of PCB and mounting method of the device.
Therefore, please make sure the device withstands the ultrasonic cleaning in actual conditions in advance of mass production.

Recommended solvent materials :

Ethyl alcohol, Methyl alcohol and Isopropyl alcohol.
In case the other type of solvent materials are intended to be used, please make sure they work fine in actual using conditions since some materials may erode the packaging resin.

● Presence of ODC

This product shall not contain the following materials.
And they are not used in the production process for this device.
Regulation substances : CFCs, Halon, Carbon tetrachloride, 1.1.1-Trichloroethane (Methylchloroform)
Specific brominated flame retardants such as the PBBOs and PBBs are not used in this product at all.

■ Package specification

● Sleeve package

1. Through-Hole or SMT Gullwing

Package materials

Sleeve : HIPS (with anti-static material)
Stopper : Styrene-Elastomer

Package method

MAX. 100pcs of products shall be packaged in a sleeve.
Both ends shall be closed by tabbed and tabless stoppers.
The product shall be arranged in the sleeve with its anode mark on the tabless stopper side.
MAX. 20 sleeves in one case.

Sleeve outline dimensions

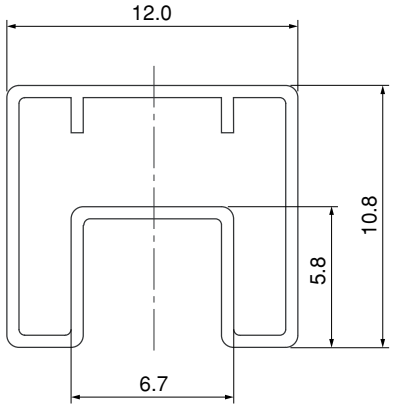

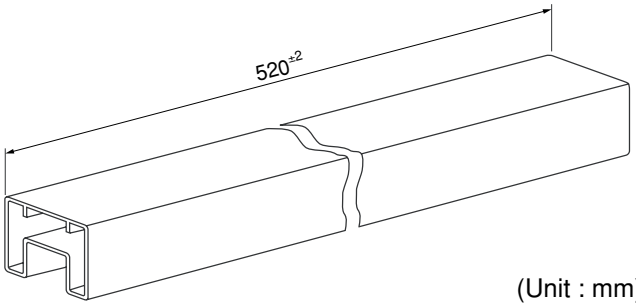

(Unit : mm)

2. Wide Through-Hole or Wide SMT Gullwing

Package materials

Sleeve : HIPS (with anti-static material)
Stopper : Styrene-Elastomer

Package method

MAX. 100pcs of products shall be packaged in a sleeve.
Both ends shall be closed by tabbed and tabless stoppers.
The product shall be arranged in the sleeve with its anode mark on the tabless stopper side.
MAX. 20 sleeves in one case.

Sleeve outline dimensions

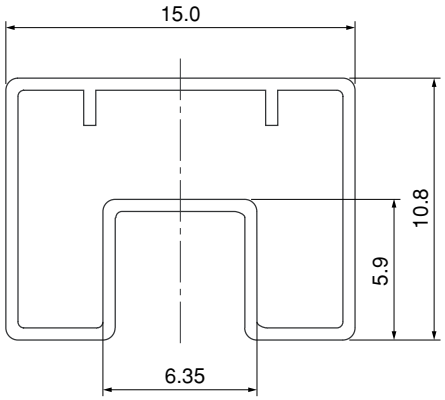

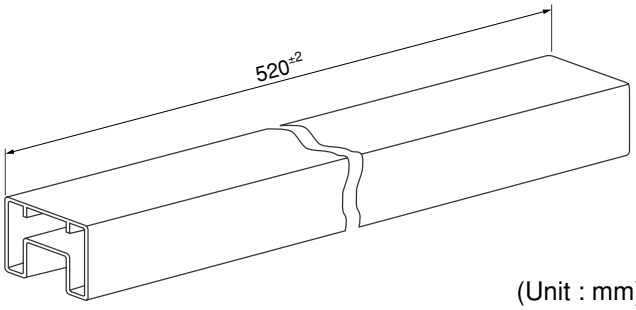

(Unit : mm)

● Tape and Reel package

1. SMT Gullwing

Package materials

Carrier tape : PS

Cover tape : PET (three layer system)

Reel : PS

Carrier tape structure and Dimensions

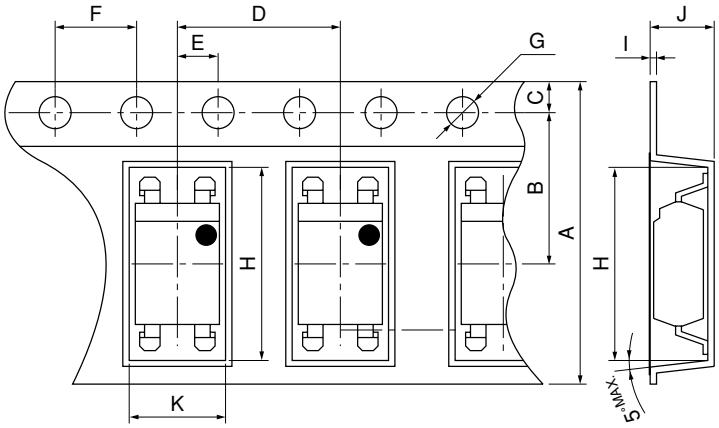

Dimensions List (Unit : mm)

A	B	C	D	E	F	G
$16.0^{\pm0.3}$	$7.5^{\pm0.1}$	$1.75^{\pm0.1}$	$8.0^{\pm0.1}$	$2.0^{\pm0.1}$	$4.0^{\pm0.1}$	$\phi1.5^{+0.1}_{-0}$
H	I	J	K			
$10.4^{\pm0.1}$	$0.4^{\pm0.05}$	$4.2^{\pm0.1}$	$5.1^{\pm0.1}$			

Reel structure and Dimensions

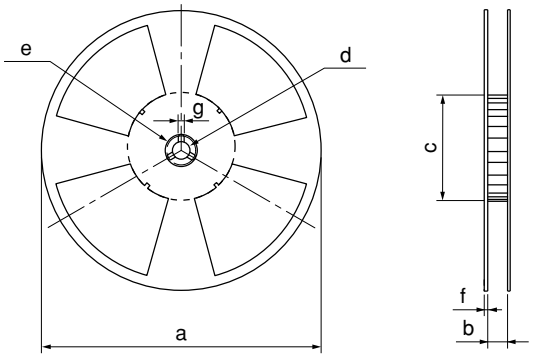

Dimensions List (Unit : mm)

a	b	c	d
330	$17.5^{\pm1.5}$	$100^{\pm1.0}$	$13^{\pm0.5}$
e	f	g	
$23^{\pm1.0}$	$2.0^{\pm0.5}$	$2.0^{\pm0.5}$	

Direction of product insertion

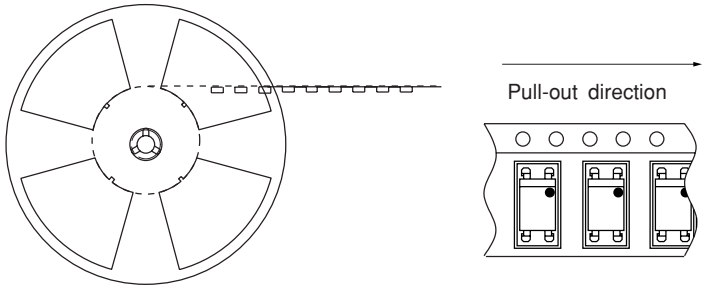

[Packing : 2 000pcs/reel]

2. Wide SMT Gullwing

Package materials

Carrier tape : PS

Cover tape : PET (three layer system)

Reel : PS

Carrier tape structure and Dimensions

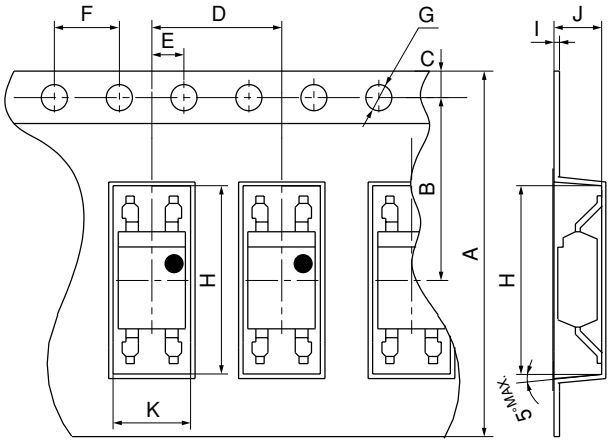

Dimensions List (Unit : mm)

A	B	C	D	E	F	G
$24.0^{\pm0.3}$	$11.5^{\pm0.1}$	$1.75^{\pm0.1}$	$8.0^{\pm0.1}$	$2.0^{\pm0.1}$	$4.0^{\pm0.1}$	$\phi1.5^{+0.1}_{-0}$
H	I	J	K			
$12.4^{\pm0.1}$	$0.4^{\pm0.05}$	$4.1^{\pm0.1}$	$5.1^{\pm0.1}$			

Reel structure and Dimensions

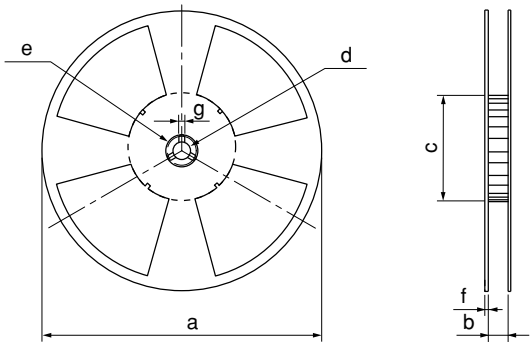

Dimensions List (Unit : mm)

a	b	c	d
330	$25.5^{\pm1.5}$	$100^{\pm1.0}$	$13^{\pm0.5}$
e	f	g	
$23^{\pm1.0}$	$2.0^{\pm0.5}$	$2.0^{\pm0.5}$	

Direction of product insertion

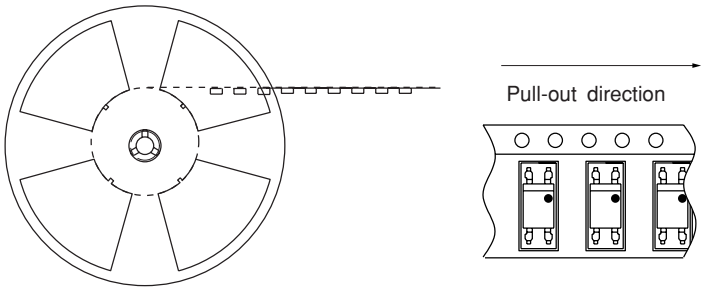

[Packing : 2 000pcs/reel]

■ Important Notices

· The circuit application examples in this publication are provided to explain representative applications of SHARP devices and are not intended to guarantee any circuit design or license any intellectual property rights. SHARP takes no responsibility for any problems related to any intellectual property right of a third party resulting from the use of SHARP's devices.

· Contact SHARP in order to obtain the latest device specification sheets before using any SHARP device. SHARP reserves the right to make changes in the specifications, characteristics, data, materials, structure, and other contents described herein at any time without notice in order to improve design or reliability. Manufacturing locations are also subject to change without notice.

· Observe the following points when using any devices in this publication. SHARP takes no responsibility for damage caused by improper use of the devices which does not meet the conditions and absolute maximum ratings to be used specified in the relevant specification sheet nor meet the following conditions:

(i) The devices in this publication are designed for use in general electronic equipment designs such as:

--- Personal computers
--- Office automation equipment
--- Telecommunication equipment [terminal]
--- Test and measurement equipment
--- Industrial control
--- Audio visual equipment
--- Consumer electronics

(ii) Measures such as fail-safe function and redundant design should be taken to ensure reliability and safety when SHARP devices are used for or in connection with equipment that requires higher reliability such as:

--- Transportation control and safety equipment (i.e., aircraft, trains, automobiles, etc.)
--- Traffic signals
--- Gas leakage sensor breakers
--- Alarm equipment
--- Various safety devices, etc.

(iii) SHARP devices shall not be used for or in connection with equipment that requires an extremely high level of reliability and safety such as:

--- Space applications
--- Telecommunication equipment [trunk lines]
--- Nuclear power control equipment
--- Medical and other life support equipment (e.g., scuba).

· If the SHARP devices listed in this publication fall within the scope of strategic products described in the Foreign Exchange and Foreign Trade Law of Japan, it is necessary to obtain approval to export such SHARP devices.

· This publication is the proprietary product of SHARP and is copyrighted, with all rights reserved. Under the copyright laws, no part of this publication may be reproduced or transmitted in any form or by any means, electronic or mechanical, for any purpose, in whole or in part, without the express written permission of SHARP. Express written permission is also required before any use of this publication may be made by a third party.

· Contact and consult with a SHARP representative if there are any questions about the contents of this publication.